Exploded view with Parts List

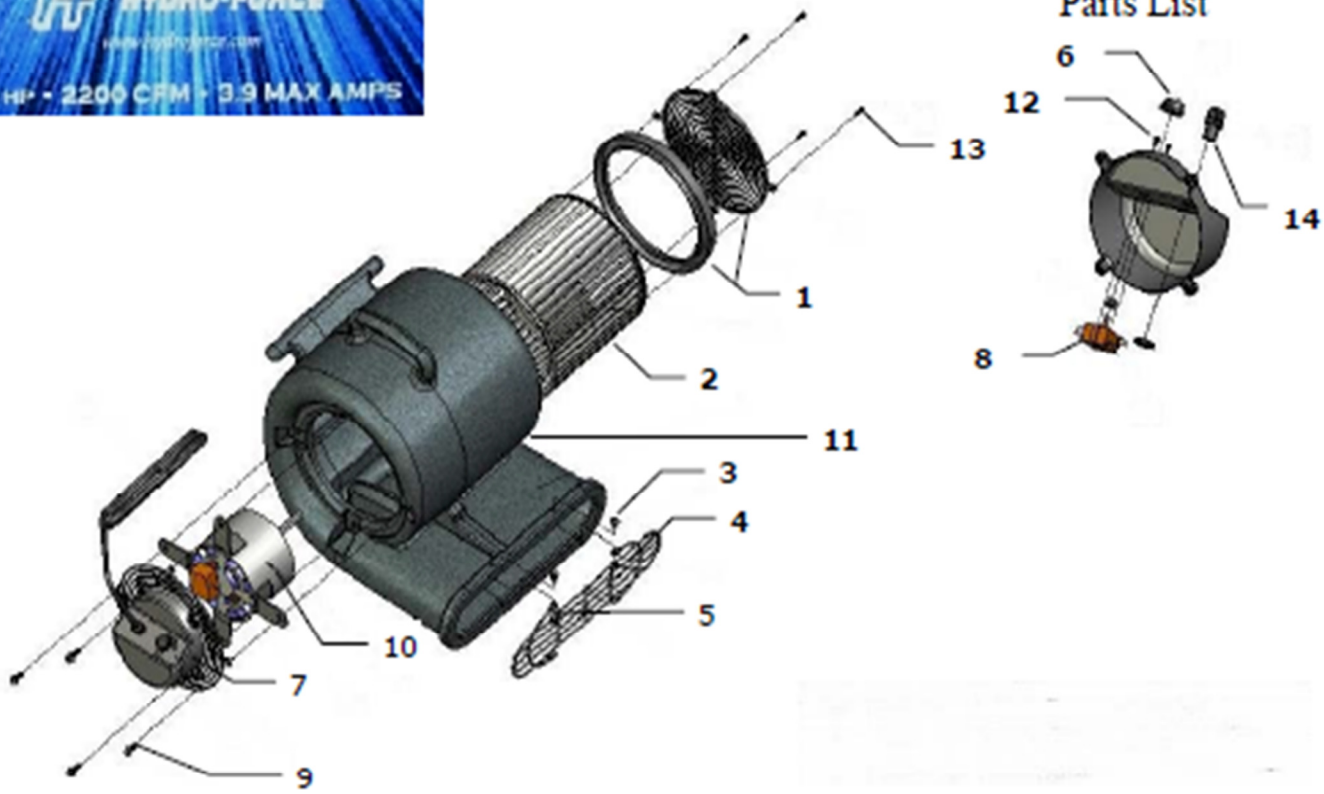

Item	Description	Qty Req.	Part#	Item	Description	Qty Req.	Part#
1	Guard,Fan Side	1	A956A	8	Switch, 4-Position	1	PVE1000A
2	Blower Wheel, SM Metal	1	H323CC	9	Flange Bolt, 1/4-20x3/4	4	1/4-20x3/4 FLG
3	Bolt, 1/4-20x3/4 Hex Head	2	1/4-20x3/4 188	10	Motor, 1/3 HP 115V	1	AB033002SM
4	Front, Guard	1	H339	11	Housing	1	
5	1/4-20 Nylon Nut	2	1/4-20 NYL	12	Screw, 4x1/2 Txp, Black Switch E543	2	4X1/2 TXP
6	Knob	1	PVE504	13	Screw, 8-15x3/4	4	8-15x3/4
7	Guard, Black Cord	1	A955AA	14	Strain Relief, comes with A955AA	1	H220